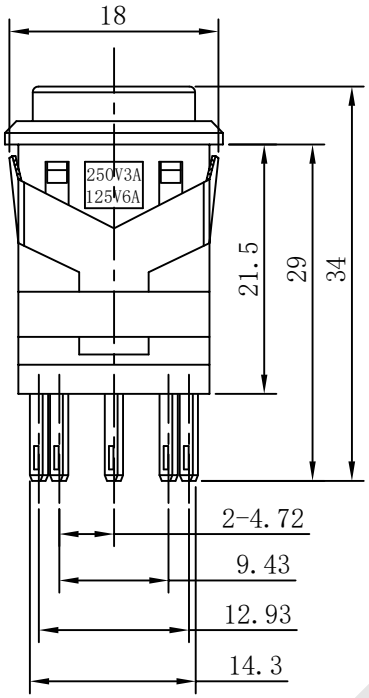

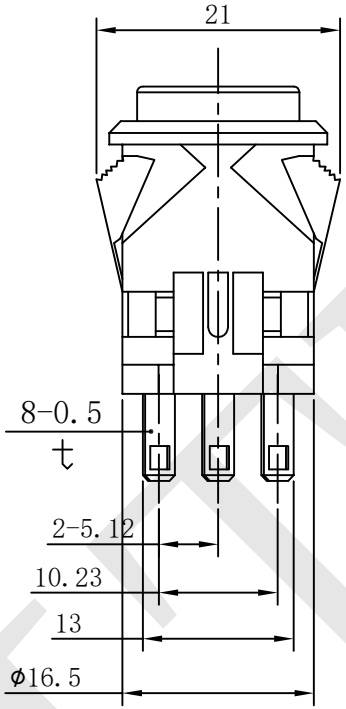

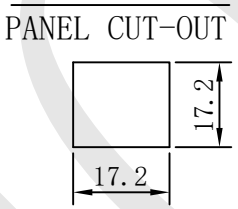

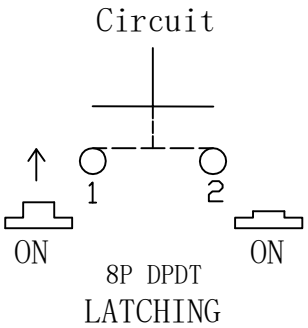

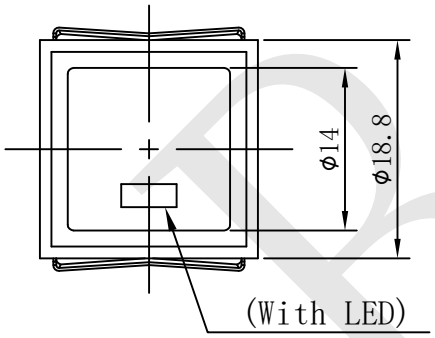

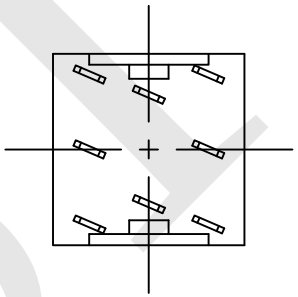

The Main Technology Performance

Item	Parameter
Rated voltage Rated current	3A 250VAC 6A 125VAC (With LED)
Insulated resistance	DC 500V 100MΩ min
Contact resistance	50mΩ Max
Dielectric strength	AC 1500V 1 minute
Operating Temperature	-25℃ ～ +85℃
Electrical Life	≥10000 Cycles

No.		Version	Layout drawing	Only For Reference
Design				
Check				
Process				
Standard				
Verified			Model:PBS2-21	BITUO ELECTRIC CO.,LTD
Approved				

BITUO