## WS1型防水開關系列 Waterproof switch series

### ◆ 特點和用途 Characteristics and usage

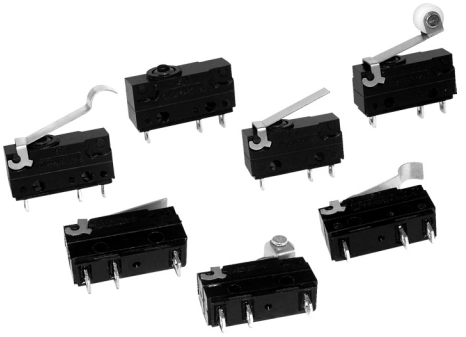

- 通過橡膠密封圈和環氧樹脂填封達到穩定的密封性。可以在會淋水或多塵埃的地方使用。
  To be stably sealed by sealed rubber ring and epoxy resin.
  Can be used in wet or dusty places.
- 接綫端子種類齊全，可配備各種導綫。
  A variety of contact terminals, provide with variety kinds of wire.
- 配備各種形式動臂
  A variety of levers.
- 原材料符合環保要求(RoHS)
  Raw material Comply with RoHS
- 可在汽車、自動售貨機、冰箱、制冰機、浴室設備、熱水器、空調等有耐環境性要求的場合及户外設備、儀器使用。
  Can be used in environment resistant places application, outdoor apparatus such as automobile, vending machine, refrigerator, ice machine, bath equipment, water heater and air–conditioner etc.

### ◆ 技術特性 Specifications

| 項目 Item | | 特性值 Value |
|---|---|---|
| 工作速度 Operating speed | | 0.1mm ~ 1m/s (無動臂時 No lever) |
| 工作頻率 Operating frequency | | 機械 60次/min;電氣 25次/min Mechanical 60 cycles/min;Electrical 25 cycles/min |
| 絶緣電阻 Insulation resistance | | ≥100MΩ (500VDC) |
| 接觸電阻 Contact resistance | | 端子型 Terminal type ≤50mΩ<br>導綫型 Wire type ≤100mΩ |
| 耐電壓 Test voltage | 同極不相接端子間<br>Between terminals of the same polarity | AC1000V,50/60Hz，1min |
| | 帶電金屬零件與地(外殼)之間、接綫端與不帶電金屬件之間<br>Between current–carrying metal parts and Ground(case), and between each terminal and non–current–carrying metal parts. | AC1500V ，50/60Hz，1min |
| 抗振動 Vibration resistance | | 10 ~ 55Hz，1.5mm 雙振幅 Double amplitude |
| 抗衝擊 Shock resistance | | 耐久 endurance: 1000m/S²(約100G approx.100G)max<br>誤動作 Wrong action:300m/S²(約30G approx.30G)max |
| 防觸電保護等級<br>Electric shock proof protection grade | | Ⅰ級 class |
| 外殼防護等級<br>Degree protection provided by enclosure | | IEC IP67<br>(端子型的端子部位除外 Besides terminal part of terminal type) |
| 壽命 Life | | 機械≥1,000,000次; Mechanical ≥1,000,000 cycles<br>電氣≥50,000次; Electrical ≥50,000 cycles |
| 安全認證 Safety approvals | | UL、CUL、TUV、CE |

## ◆ 型號規格命名及含義 Model number legend and meanings

WS1 □–□□□–□□□□□□–□
1 2 3 4 5 6 7 8 9 10

| | |
|---|---|
| **1**<br>温度等級<br>Degree of temperature | 無標記 No mark: 20T85<br>T:25T125 |
| **2**<br>額定值<br>Ratings | 無標記 No mark:<br>5(2)A250VAC/5A125VAC<br>B:3(1)A250VAC/3A125VAC<br>C:1(0.3)A250VAC/1A125VAC<br>F:0.1A250VAC/0.1A125VAC |
| **3**<br>接觸形式<br>Circuit | Z:轉換式 SPDT<br>T:常開(按通)式 SPST–NO<br>D:常閉(按斷)式 SPST–NC<br>(見說明圖 See illustration) |
| **4**<br>驅動形式<br>Actuator forms | 0:無動臂 No lever<br>1/B1:短動臂 Short lever<br>2/B2:長動臂 Long lever<br>3/B3:中動臂 Middle lever<br>4/B4:短滚輪臂 Short roller<br>5/B5:長滚輪臂 Long roller<br>6/B6:弧形動臂 Arc lever<br>□/B□:非標準動臂 not standard lever<br>注：□ 表示非標準動臂的代號，B表示動臂安裝在離按鈕的遠端。<br>Note: □ Indicate not standard lever,B indicate the lever far away from the plunger |
| **5**<br>端子類型<br>Terminal types | F:焊接端子<br>solder terminal<br>P:PCB端子<br>PCB terminal<br>L:左側面PCB端子<br>Left side PCB terminal<br>R:右側面PCB端子<br>Right side PCB terminal<br>T:110快接端子<br>110 quick–connect<br>Y:非標準端子<br>not standard terminal<br>W:導綫型<br>wire type |
| **6**<br>動作力(max)<br>Operating force | 050: 0.5N<br>100: 1N<br>150: 1.5N<br>200: 2N<br>300: 3N<br>注：若是非標準動作力，用此動作力上限值表示。<br>Note: If it is not standard operating force, indicate with the upper limit. |
| **7**<br>按鈕規格<br>Plunger specs | 無標記 No mark: 標準按鈕 Standard plunger<br>□:非標準按鈕 Not standard plunger<br>注：□表示非標準按鈕的代號<br>Note:□Indicate not standard plunger |
| **8**<br>導綫方向及長度<br>Wire direction and length | R□:導綫在按鈕遠端引出<br>Wire be educed at the distance of plunger<br>L□:導綫在按鈕近端引出<br>Wire be educed at the close of plunger<br>D□:導綫在開關下方引出<br>Wire be educed at the lower part of switch<br>(□爲導綫長度毫米數)<br>(□ Is the length number–“mm” of the wire) |
| **9**<br>防護等級<br>Degree protection provided by enclosure | 無標記 No mark：IP67<br>□□：IP□□ |
| **10**<br>附加規格代號及導綫顏色配置代號<br>Append specs code and wire color code | 適用于apply to：<br>1)當開關使用了非標準零件如非標準端子時；<br>When used not standard parts such as not standard terminal.<br>2)當顧客有特殊動作特性值或其它要求時；<br>When customer has particular operating value or other requirements.<br>3)當導綫顏色不是默認的配置顏色時。<br>When the wire color is not the default color.<br>■ 附加規格代號用阿拉伯數字表示，在没有附加規格編號時，該位置空缺。<br>Additional specs number shows by Arabic numerals. If there is no additional numbers, the place is vacant.<br>■ 導綫顏色配置代號：用三個英文字母按COM、NC、NO順序表示；若是常開式或常閉式開關，空缺位置用字母O表示。(顏色代號：紅–R、白–W、黑–B、綠–G、藍–L、黄–M、灰–H、紫–P)。<br>Wire color code:indicate with 3 letters,the order is COM、NC、NO;If NO or NC,vacant place shows 0. (Color code:red–R,white–W,black–B,green–G, blue–L,yellow–Y,grey–H,purple–P)<br>示例example：BWR，BOR，RRO<br>■ 若同時有附加規格代號和導綫顏色配置代號，則導綫顏色配置代號位于附加規格代號之後。<br>If there are append specs code and wire color code at the same time,then the wire color code should be after the append specs code.<br>示例 example：02BWR |

## ◆ 內部構造圖 Internal configuration drawing

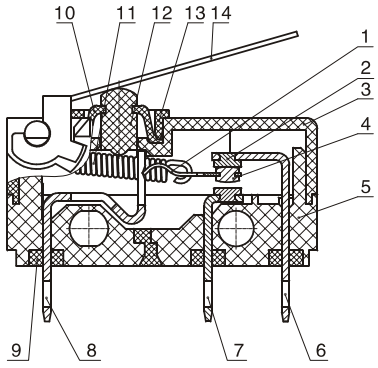


| | | |
|---|---|---|
| 1: | 可動片 | Moving piece |
| 2: | 電觸點 | Contact |
| 3: | 蓋 | Cover |
| 4: | 電觸點 | Contact |
| 5: | 基座 | Case |
| 6: | 常閉端子 | NC terminal |
| 7: | 常開端子 | NO terminal |
| 8: | 支架 | Support |
| 9: | 環氧樹脂 | Epoxy resin |
| 10: | 密封圈 | Hermetic loop |
| 11: | 拉簧 | Pull spring |
| 12: | 開關子(按鈕) | Plunger |
| 13: | 壓環 | Clasp ring |
| 14: | 動臂 | Moving arm |

## ◆ 接觸形式說明圖 Circuit illustration

| 轉換式 SPDT | 常開式 SPST-NO | 常閉式 SPST-NC |
|---|---|---|
| 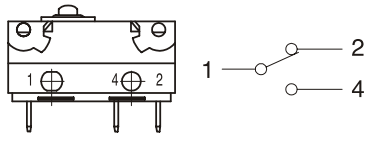 | 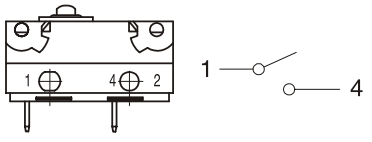 | 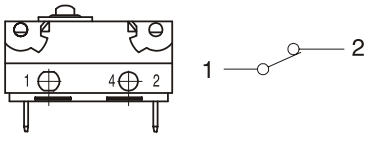 |



## ◆ 接綫端尺寸 Terminal dimensions

| 焊接端子<br>Solder terminal | 快接端子#110<br>Quick connect terminal #110 | PCB端子<br>PCB terminal |
|---|---|---|
| 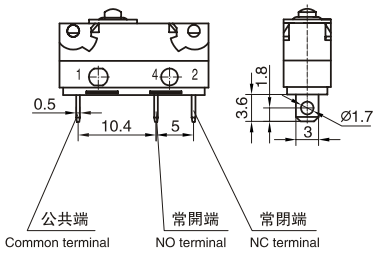 | 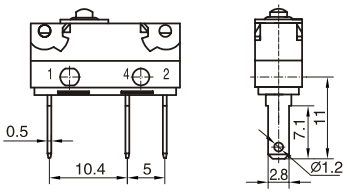 | 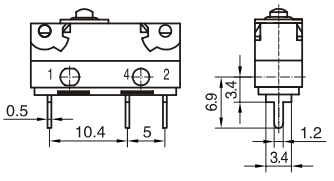 |



## ◆ 導綫型外形圖 Outline drawing of wire type

| WS1□-□Z0-W□R□ | WS1□-□Z0-W□L□ | WS1□-□Z0-W□D□ |
|---|---|---|
| 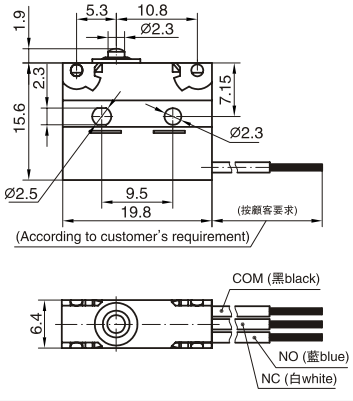 | 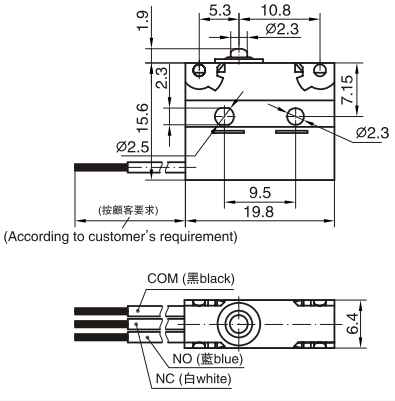 | 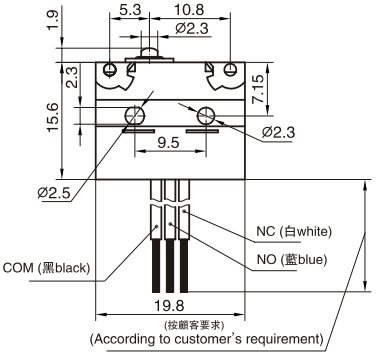 |

## ◆ 安裝孔尺寸 Mounting hole dimensions

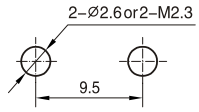


PCB端子 PCB terminal

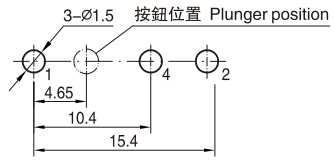


## ◆ 外形尺寸和動作特性 Dimensions and operating characteristics

WS1-□Z0-F100
WS1-□Z0-F150
WS1-□Z0-F200
WS1-□Z0-F300

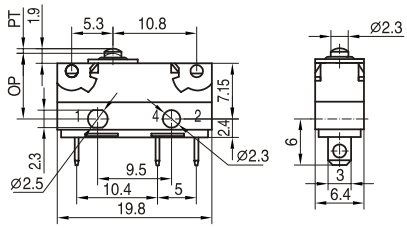


| 型 號 Model | WS1-□Z0-F100 | WS1-□Z0-F150 | WS1-□Z0-F200 | WS1-□Z0-F300 |
|---|---|---|---|---|
| OF Max(N) | 1.00 | 1.50 | 2.00 | 3.00 |
| RF Min(N) | 0.20 | 0.30 | 0.60 | 1.00 |
| PT Max(mm) | 0.8 | | | |
| OT Min(mm) | 0.4 | | | |
| MD Max(mm) | 0.1 | | | |
| OP(mm) | 8.4 ± 0.4 | | | |

WS1-□Z3-F100
WS1-□Z3-F150
WS1-□Z3-F200
WS1-□Z3-F300

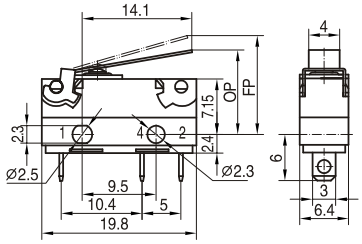


| 型 號 Model | WS1-□Z3-F100 | WS1-□Z3-F150 | WS1-□Z3-F200 | WS1-□Z3-F300 |
|---|---|---|---|---|
| OF Max(N) | 0.45 | 0.55 | 0.75 | 1.10 |
| RF Min(N) | 0.10 | 0.15 | 0.20 | 0.30 |
| OT Min(mm) | 1.0 | | | |
| MD Max(mm) | 0.6 | | | |
| FP Max(mm) | 14.5 | | | |
| OP(mm) | 10.7 ± 0.8 | | | |

WS1-□Z6-F100
WS1-□Z6-F150
WS1-□Z6-F200
WS1-□Z6-F300

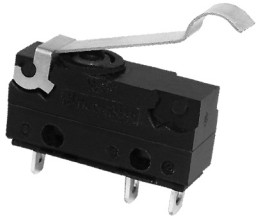

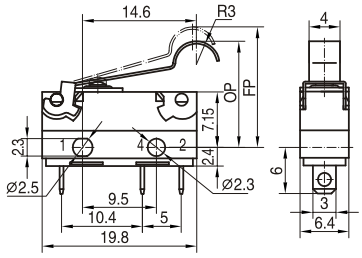


| 型 號 Model | WS1-□Z6-F100 | WS1-□Z6-F150 | WS1-□Z6-F200 | WS1-□Z6-F300 |
|---|---|---|---|---|
| OF Max(N) | 0.38 | 0.50 | 0.70 | 1.05 |
| RF Min(N) | 0.08 | 0.15 | 0.20 | 0.30 |
| OT Min(mm) | 1.0 | | | |
| MD Max(mm) | 0.6 | | | |
| FP Max(mm) | 16.5 | | | |
| OP(mm) | 13.7 ± 0.8 | | | |

WS1-□Z5-F100
WS1-□Z5-F150
WS1-□Z5-F200
WS1-□Z5-F300

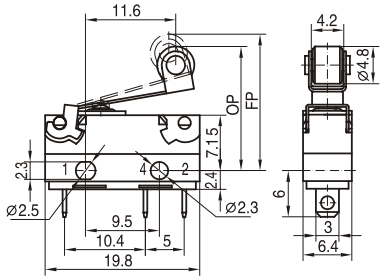


| 型號 Model | WS1-□Z5-F100 | WS1-□Z5-F150 | WS1-□Z5-F200 | WS1-□Z5-F300 |
|---|---|---|---|---|
| OF Max(N) | 0.50 | 0.60 | 0.80 | 1.25 |
| RF Min(N) | 0.12 | 0.15 | 0.20 | 0.30 |
| OT Min(mm) | 1.0 | | | |
| MD Max(mm) | 0.6 | | | |
| FP Max(mm) | 18.5 | | | |
| OP(mm) | 16.6±0.8 | | | |

WS1-□ZB3-F100
WS1-□ZB3-F150
WS1-□ZB3-F200
WS1-□ZB3-F300

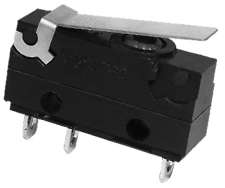

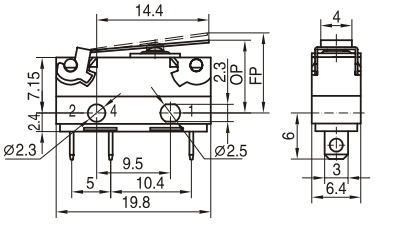


| 型號 Model | WS1-□ZB3-F100 | WS1-□ZB3-F150 | WS1-□ZB3-F200 | WS1-□ZB3-F300 |
|---|---|---|---|---|
| OF Max(N) | 0.70 | 1.05 | 1.40 | 2.10 |
| RF Min(N) | 0.20 | 0.30 | 0.40 | 0.60 |
| OT Min(mm) | 0.8 | | | |
| MD Max(mm) | 0.4 | | | |
| FP Max(mm) | 11.5 | | | |
| OP(mm) | 9.3±0.5 | | | |

WS1-□ZB6-F100
WS1-□ZB6-F150
WS1-□ZB6-F200
WS1-□ZB6-F300

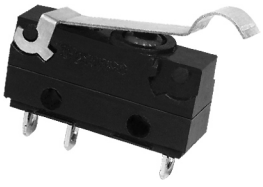

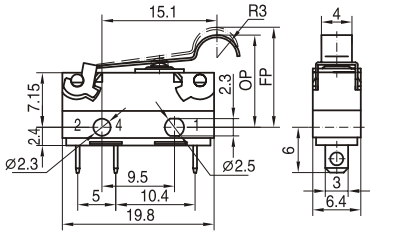


| 型號 Model | WS1-□ZB6-F100 | WS1-□ZB6-F150 | WS1-□ZB6-F200 | WS1-□ZB6-F300 |
|---|---|---|---|---|
| OF Max(N) | 0.65 | 1.00 | 1.35 | 2.05 |
| RF Min(N) | 0.20 | 0.30 | 0.40 | 0.60 |
| OT Min(mm) | 0.8 | | | |
| MD Max(mm) | 0.4 | | | |
| FP Max(mm) | 14.0 | | | |
| OP(mm) | 11.4±0.6 | | | |

WS1-□ZB5-F100
WS1-□ZB5-F150
WS1-□ZB5-F200
WS1-□ZB5-F300

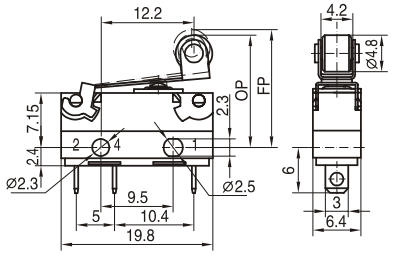


| 型號 Model | WS1-□ZB5-F100 | WS1-□ZB5-F150 | WS1-□ZB5-F200 | WS1-□ZB5-F300 |
|---|---|---|---|---|
| OF Max(N) | 0.80 | 1.20 | 1.60 | 2.40 |
| RF Min(N) | 0.25 | 0.40 | 0.50 | 0.80 |
| OT Min(mm) | 0.6 | | | |
| MD Max(mm) | 0.4 | | | |
| FP Max(mm) | 17.0 | | | |
| OP(mm) | 15±0.6 | | | |

## ◆ 請正確使用 Please use it correctly

【共通注意事項】請參閱相關頁。

【Common points for attention】please refer to related pages

■ 注意事項 Attention items

(1) 關于保護構造 Concerning protection structure

請勿在水中使用。開關雖然滿足IP67的試驗條件，但這些試驗是在水中放置一段時間後確定進水程度的試驗，而并非在水中進行開閉動作的試驗。

Do not use switch in the water. Although the switch meets the test requirement of IP67, these tests the water entering degree after switch put in the water after period of time, it is not test the ON /OFF operation in the water.

當處于經常有水滴的狀態，以及溫度急劇變化情况下由于冷凝，都可能發生水分侵入開關内部的情况，請引起充分注意。

Usually under the condition of dropped water and temperature changed rapidly, condensation, water may enter into the switch because of condensation, please take note.

請避免油污、化學品的附着。否則可能出現使用材質變質及引起老化。

Please avoid the greasy dirt & chemical adhesion. Otherwise, the quality of using material may deteriorate and aging.

若在含硅粘合劑、油脂等環境下使用，可能因生成氧化硅而產生接觸不良。

If use under the condition of which contains silicon bond, grease environment, bad contact may happen because of the oxidation silica created.

根據開關負荷種類、周圍環境、設置條件等的不同，耐環境性能會有所不同。請務必在實際使用環境下進行實機確認。

Environment resistance will be different in relation to load types, ambient environment and setup condition. Please confirm it with exact machine under exact using environment.

(2) 關于端子的接綫 Concerning terminal connecting wire

焊接時的烙鐵温度350～400℃, 焊接時間在3s之内。過高温度下的作業、長時間的過熱容易引起開關老化。

The soldering iron temperature at 350～400℃, time in 3s. If operate temperature is too high or too long time in excess of heating, switch aging may happen.

對于快接式端子，插套插入插片時，應避免在端子的横向加力，以免引起端子變形和外殼破損。

Regarding the quick connect terminal, when insert slipcover into the insert piece, please do not exert transverse press to the terminal, in order to avoid terminal distort and cover breakage.

使用自動焊接槽時，建議在260±5℃下5s内進行作業。印制板的焊接，應注意焊劑及焊接的液面不要超過印制板。

Soldering with automatic wave soldering, we suggest to operate at 260±5℃, within 5s. Soldering the printed board, please pay attention to soldering dosage and soldering tin do not exceed the printed circuit board

■ 關于使用 Concerning using

使用過程中應充分注意不要損壞按鈕處的密封橡膠。

Please do not damage the sealed rubber around the button in the process of usage.

■ 關于安裝 Concerning the installation

(1) 開關的安裝、拆卸和配綫作業以及維護檢查時，請務必斷開電源，否則會引起觸電和燒毀。

Please turn off the power when installing, disassembling, wiring work and maintenance check, otherwise, electric shock and burn will happen.

(2) 安裝時，使用2個M2.3螺釘，用平墊圈、彈簧墊圈等緊固，并請使用0.23～0.26N・m的緊固轉矩。

When installing, please use 2 M2.3 screws, then tight it with flat washer, spring washer, and also tight with 0.23～0.26N・m torque.

(3) 開關請安裝在平面上。如果安裝面凹凸不平，可能導致開關歪斜、動作失常和外殼破損。

Please install switch on flat surface. If it is installed in uneven surface, switch deflection, malfunction and cover breakage will happen.

■ 關于導綫型的布綫 Concerning wiring of wire type

布綫時應注意不要出現外力施加于導綫或從導綫引出部直接進行彎曲等現象。

When wiring, please do not exert external force to the wire or curve directly from the place where the wire draws out.

■ 關于微小負載電路中的使用 Concerning use in small load circuit

如果在開關微小負載電路中使用一般負載用開關，可能會引起接觸不良。

Use general load switch in small load circuit, bad contact may happen.

請參考下圖在使用區域的範圍内使用開關，并根據需要插入觸點保護電路。
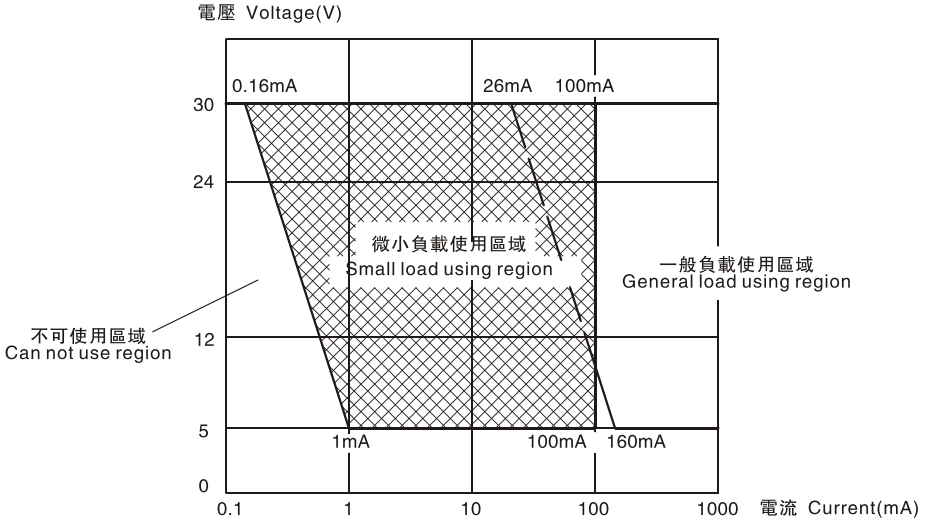
Please refer to the chart below, use switch within using region and insert contact protection circuit according to the needs.